CNENGR115 Computers and Control

Review

Dr Zhongming Zhang

School of Engineering
Lancaster University

Computer Programming

- Aim – to introduce students to the fundamentals of writing computer programs for embedded systems
- Laboratories

Automatic Control

- Aim – to introduce students to mathematical modeling and automatic control theory
- Lectures + Tutorials

Assessment	Contributes
Progress Test (Week 8)	45%
Laboratory Exercise (Weeks 1, 3, 5, 7)	45%
Tutorials	10%
Summer Exam	No exam for this module!

Computer Programming

- Assessment (total 45%)
  - 6% Lab 1
  - 6% Lab 2
  - 6% Lab 3
  - 27% Lab 4

Automatic Control

- Assessment (total 55%)
  - 45% Progress Test
  - 10% Tutorials

Control Lectures

Part 1 – Introduction

Part 2 – Mathematical Models

Part 3 – Control Actions

Control Lectures

Part 1 – Introduction ✓

Part 2 – Mathematical Models

Part 3 – Control Actions

Control Lectures

Part 1 – Introduction ✓

Part 2 – Mathematical Models

Part 3 – Control Actions

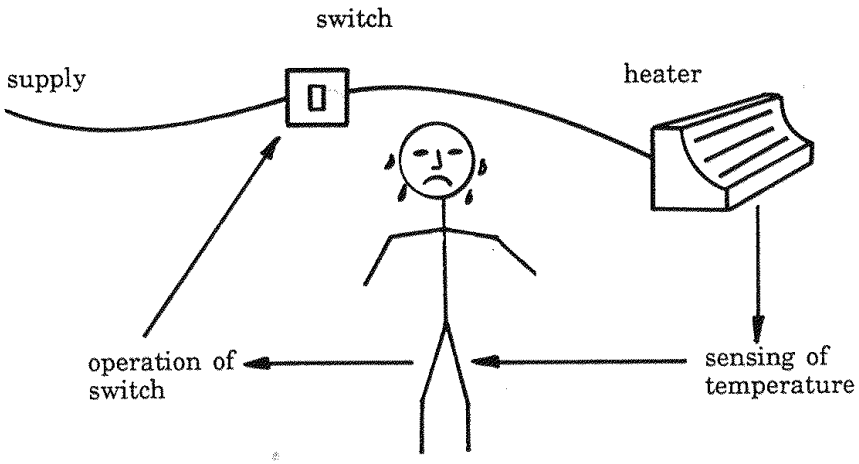

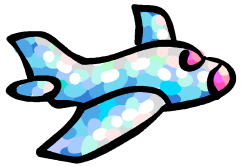

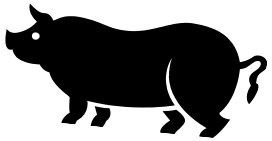

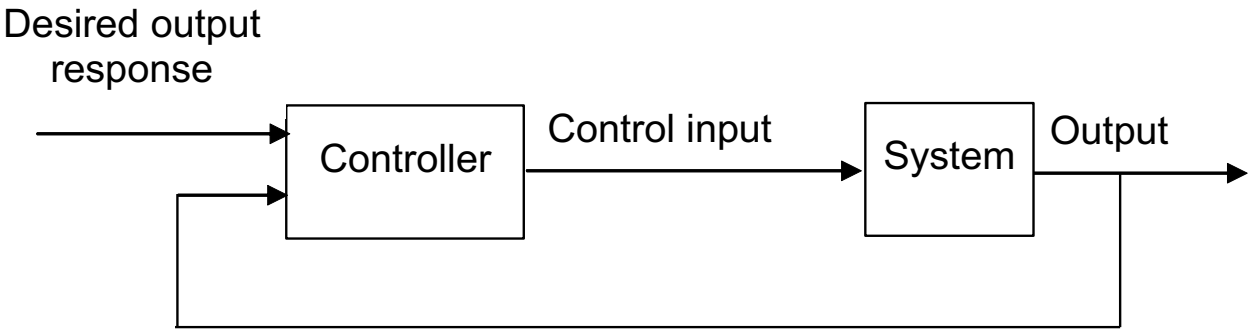

Control Lectures

Part 1 – Introduction ✓

Part 2 – Mathematical Models ✓

Part 3 – Control Actions

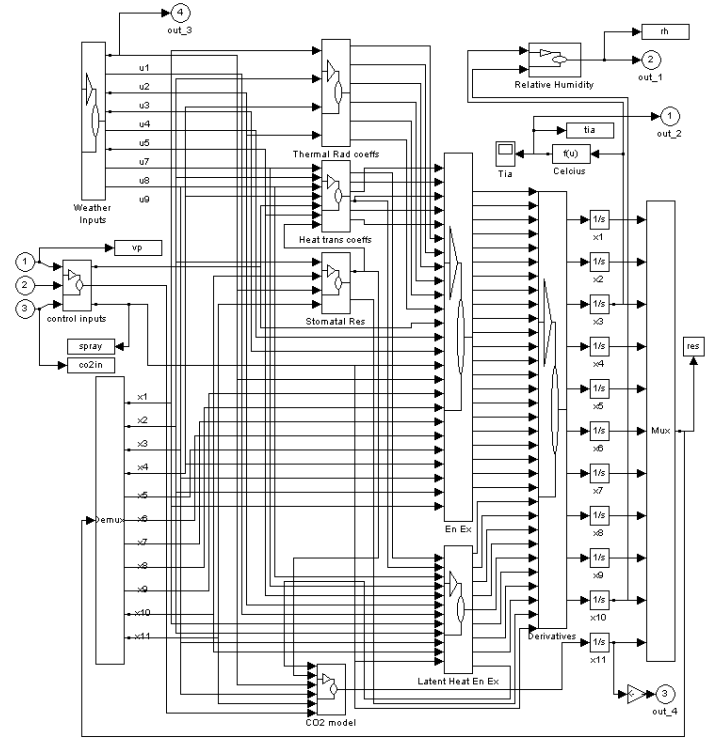

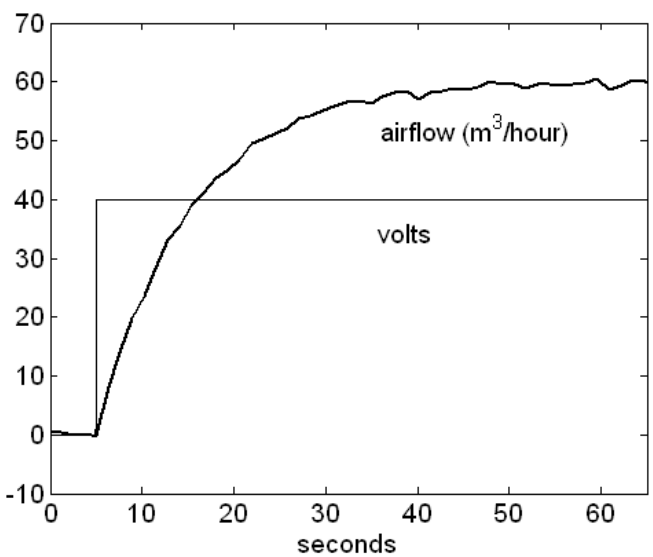

$$\tau \dot{x} + x = Ku(t)$$

Control Lectures

Part 1 – Introduction ✓

Part 2 – Mathematical Models ✓

Part 3 – Control Actions

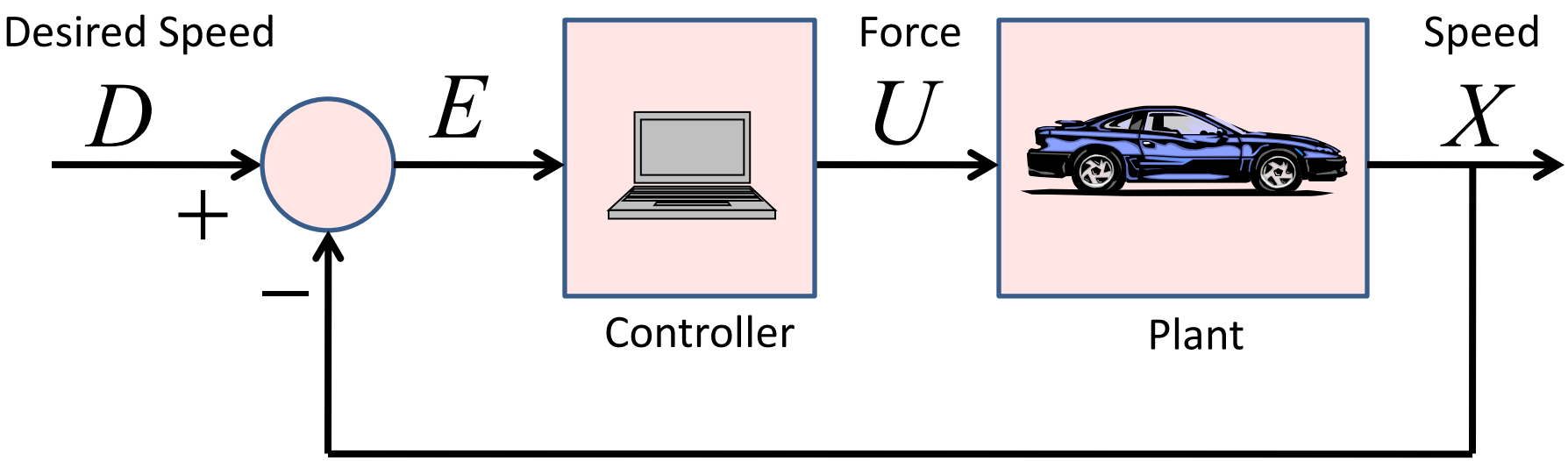

Control Lectures

$$X = \frac{1.5k_I}{10s^2 + s + 1.5k_I} D$$

Part 1 – Introduction ✓

Part 2 – Mathematical Models ✓

Part 3 – Control Actions

Block Diagram Analysis

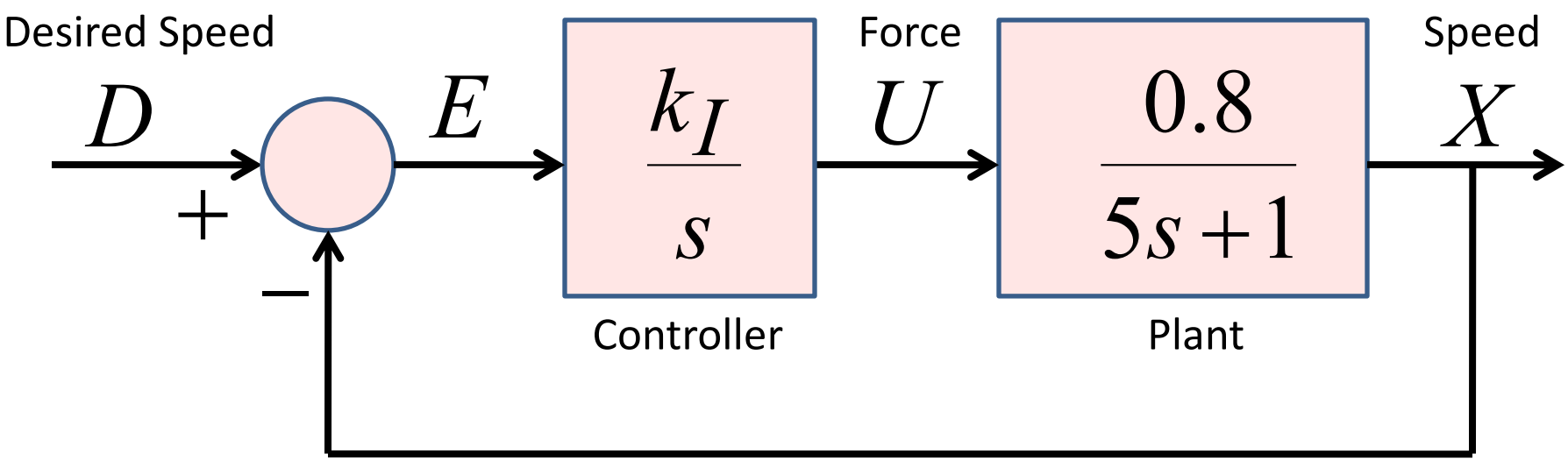

Control Lectures

Part 1 – Introduction ✓

Part 2 – Mathematical Models ✓

Part 3 – Control Actions ✓

Proportional

Integral

Proportional + Integral

Nuclear Decommissioning Robot

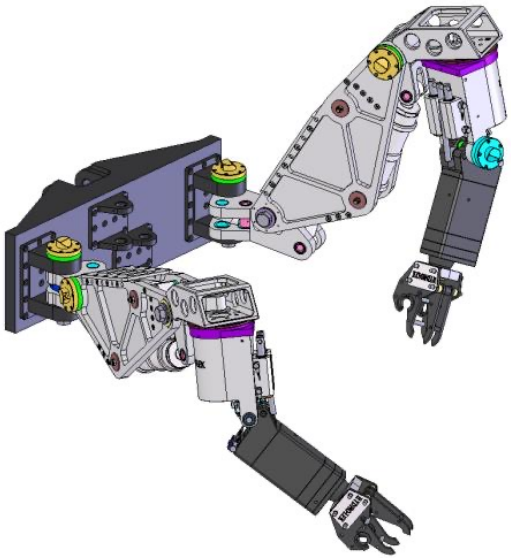

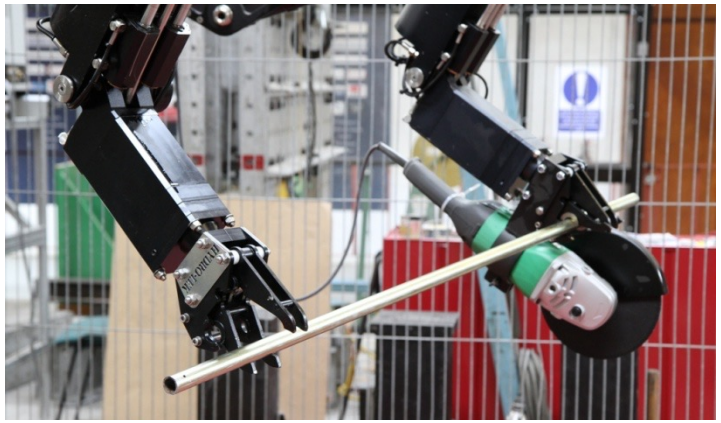

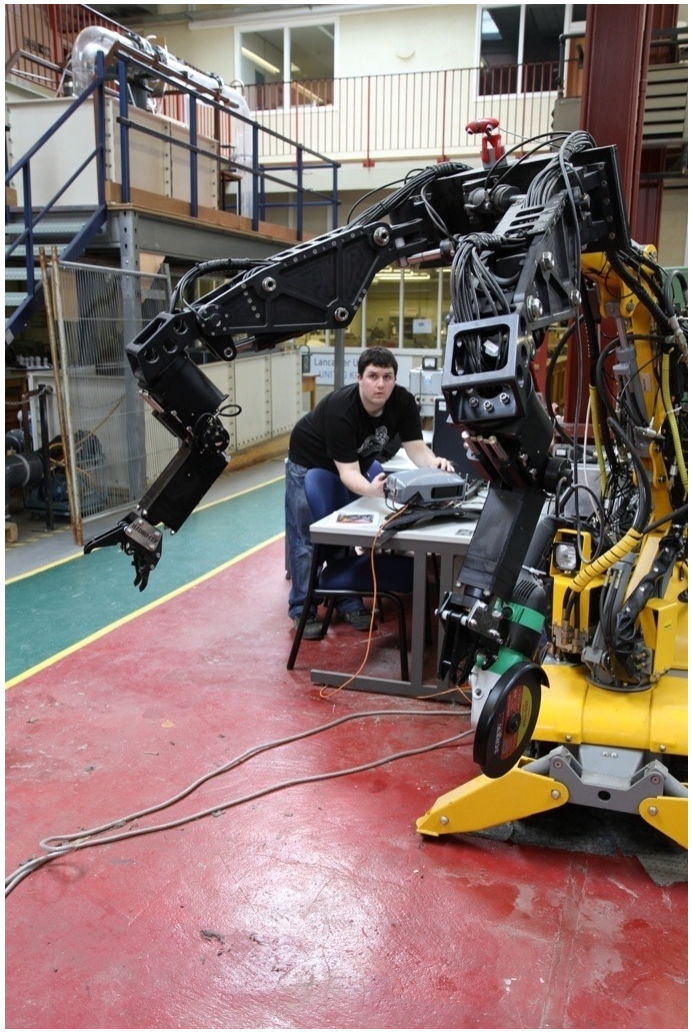

On–Line Implementation (1 joint)

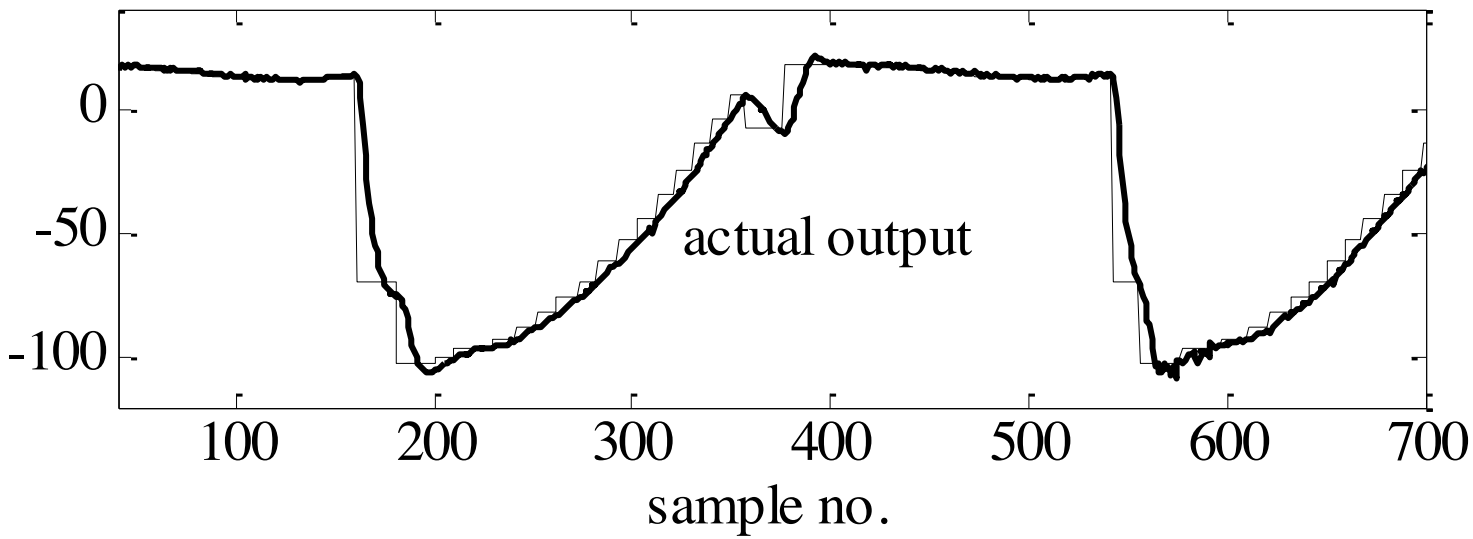

On–Line Implementation (2 joints)

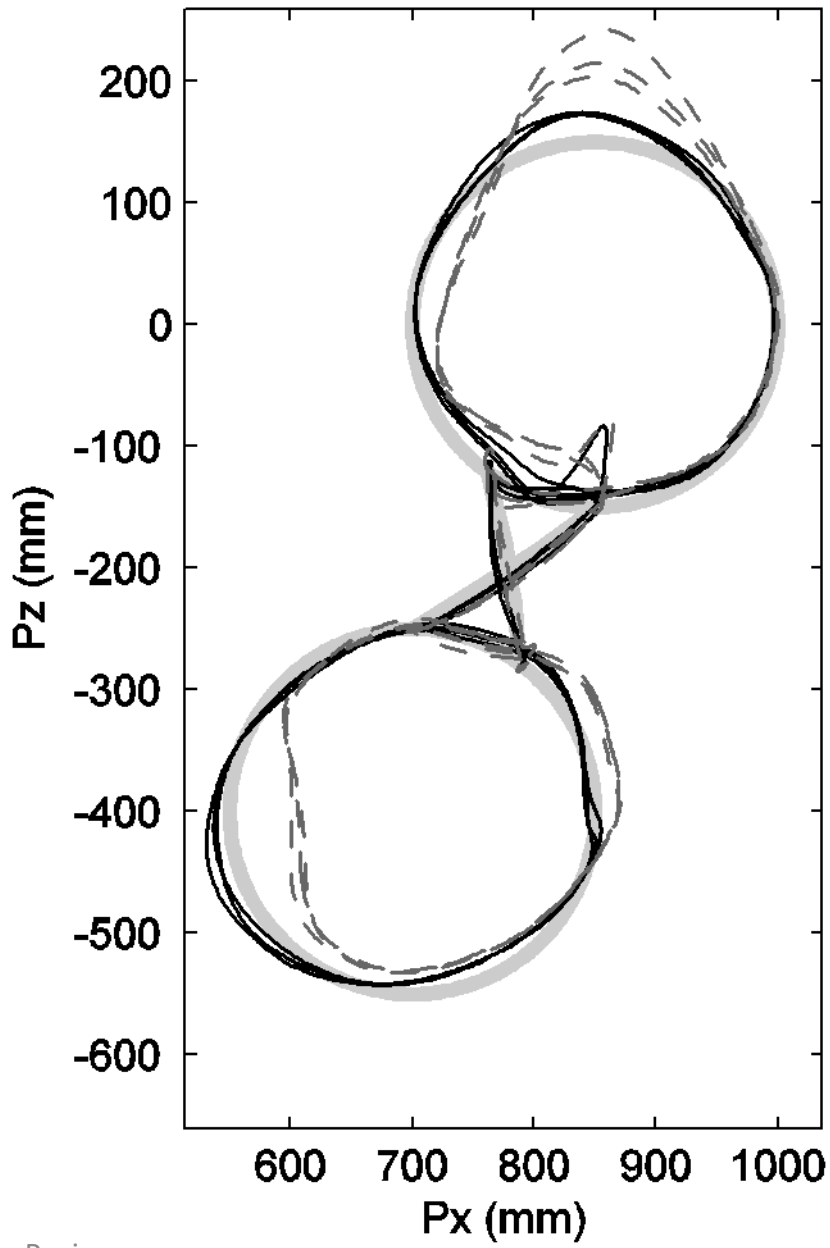

Control Lectures

Part 1 – Introduction ✓

Part 2 – Mathematical Models ✓

Part 3 – Control Actions ✓